Round 1 & 2 - Wednesday, January 26th & Thursday, January 27th

SHOTLINK

Farmers Insurance Open

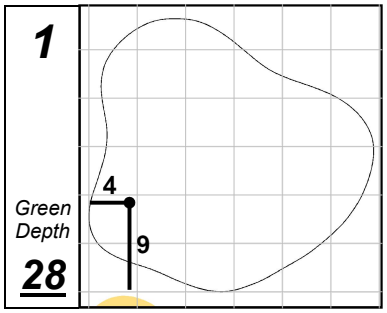

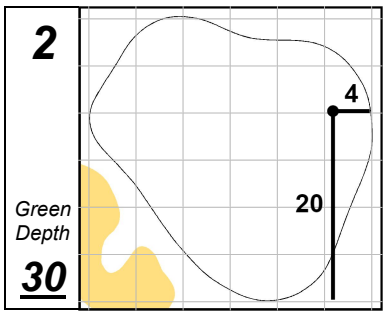

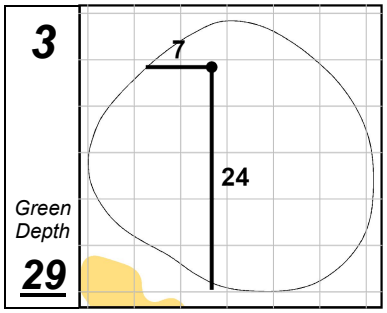

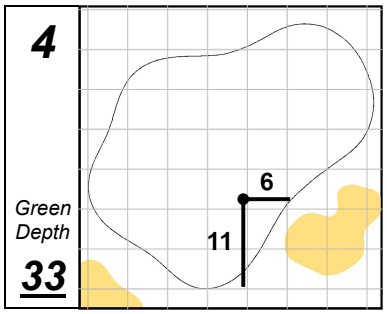

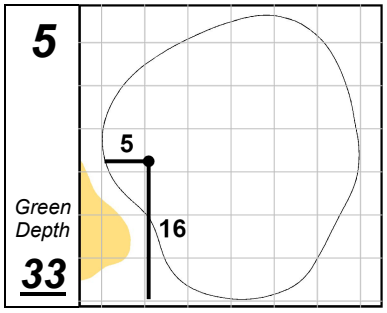

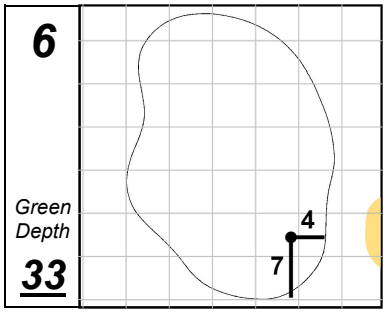

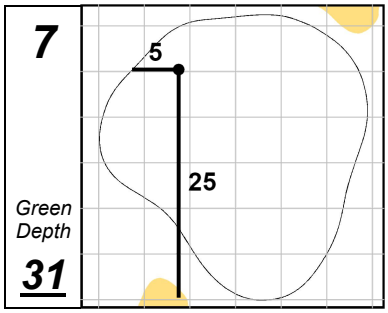

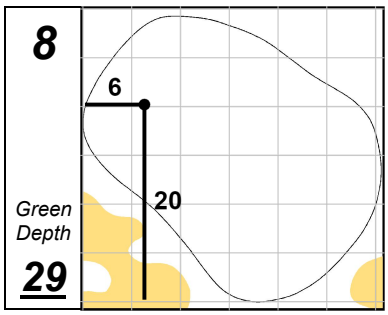

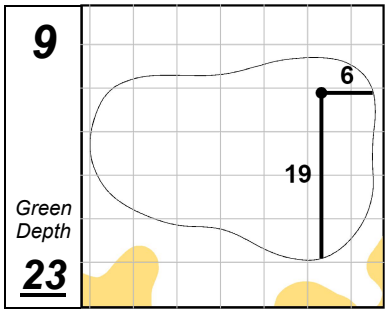

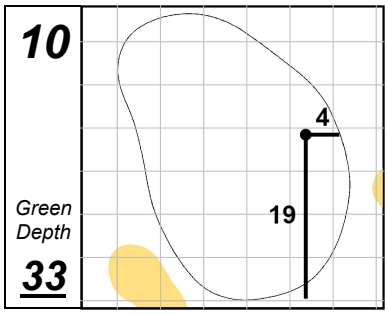

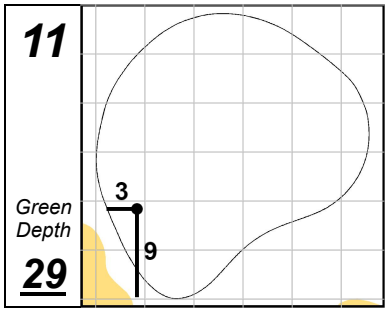

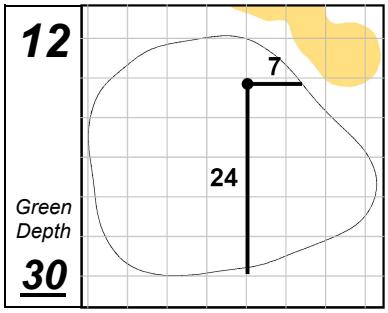

Torrey Pines (North)

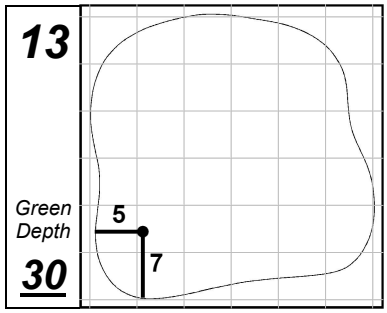

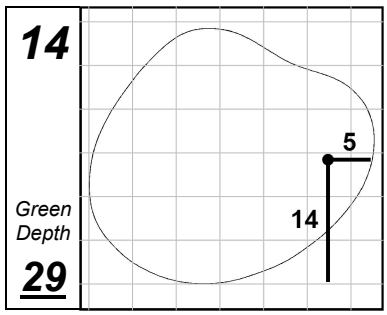

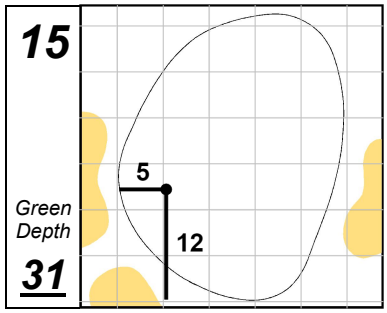

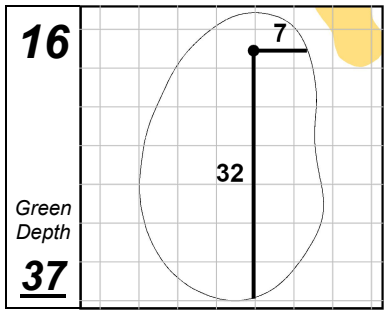

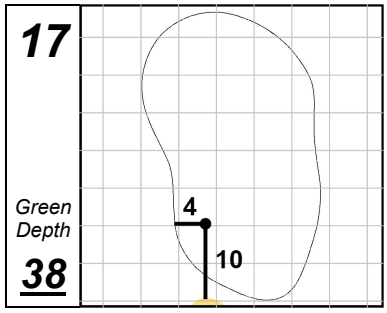

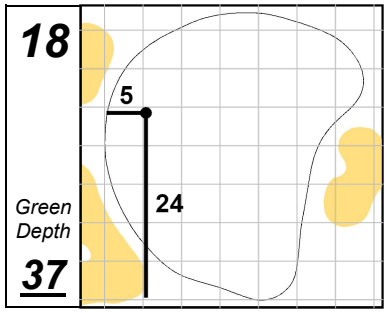

Each side of a complete square on the green represents 5 YARDS.

Tuesday, January 25, 2022 3:58:35 PM